REVISIONS				
REV.	DESCRIPTION	E.C.O. NO.	DATE	APPROVED
XX	XX	XX	XX	

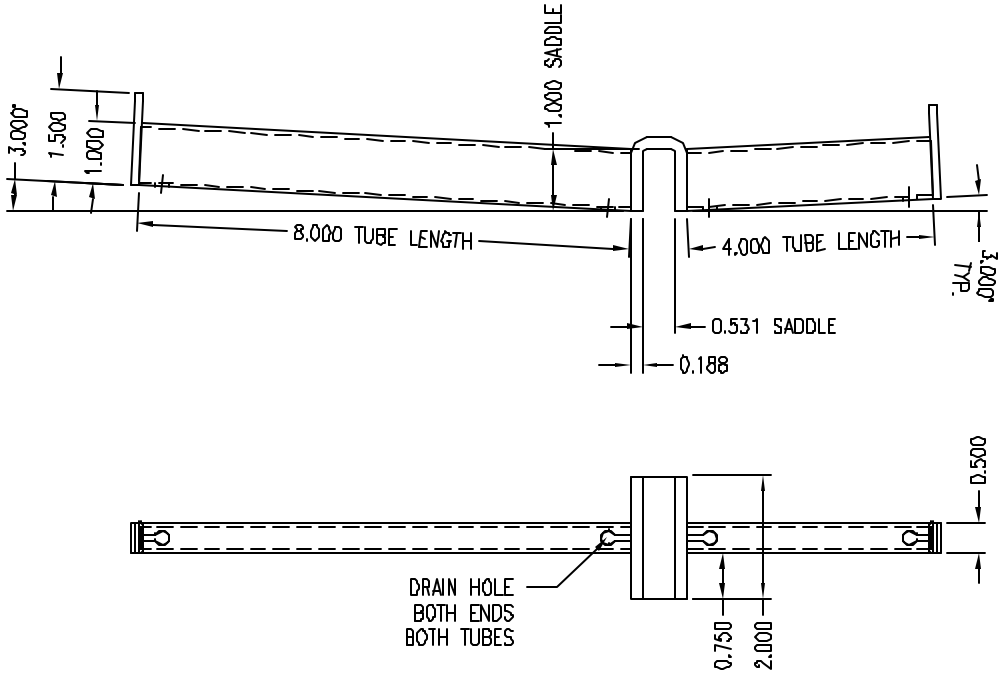

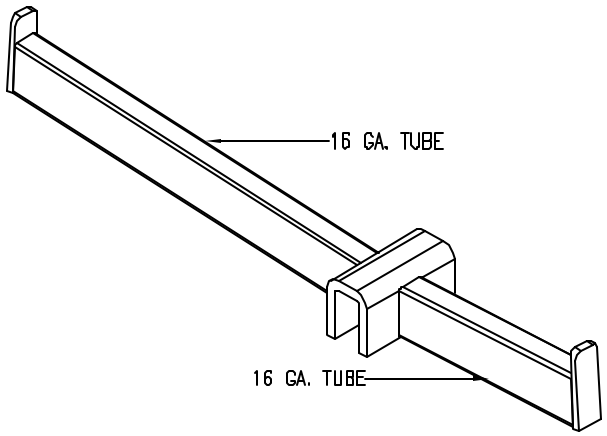

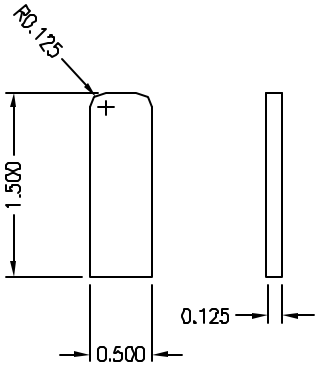

I-NS MARKS IS THE EXCLUSIVE PROPERTY OF REEVE STORE EQUIPMENT CO. WHO HOLDS AND MAINTAINS FULL COPYRIGHT PROTECTION UNDER FEDERAL AND STATE LAW. THIS DRAWING CANNOT BE IMPLICATED, PHOTOCOPIED, ORIGINALLY TRANSFERRED, OR REPRODUCED WITHOUT THE EXPRESS WRITTEN CONSENT OF REEVE STORE EQUIPMENT CO. COPYRIGHT © 2004, 2005, 2006, 2008, 2009. ALL RIGHTS RESERVED.

UNLESS OTHERWISE SPECIFIED DIMENSIONS ARE IN INCHES TOLERANCES ARE:

FRACTIONS:	DECIMALS:	ANGLES:
± 1/32	.XX ±.01 .XXX ±.005	± 1/2°

FINISH: SATIN NICKEL W/CLEAR COAT

DO NOT SCALE DRAWING

CUSTOMER

APPROVALS	DATE
DRAWN: dm	10-09-06
CHK'D.	
APVD.	

QUOTE NO.: N/A

REEVE STORE EQUIPMENT CO.
Pico Rivera, CA. (562) 949-2535

TITLE: **I-NS0096**

SIZE: B | DWG. NO.: I-NS0096 | REV.: -

SCALE: N.T.S. | SHEET: 1 OF 1