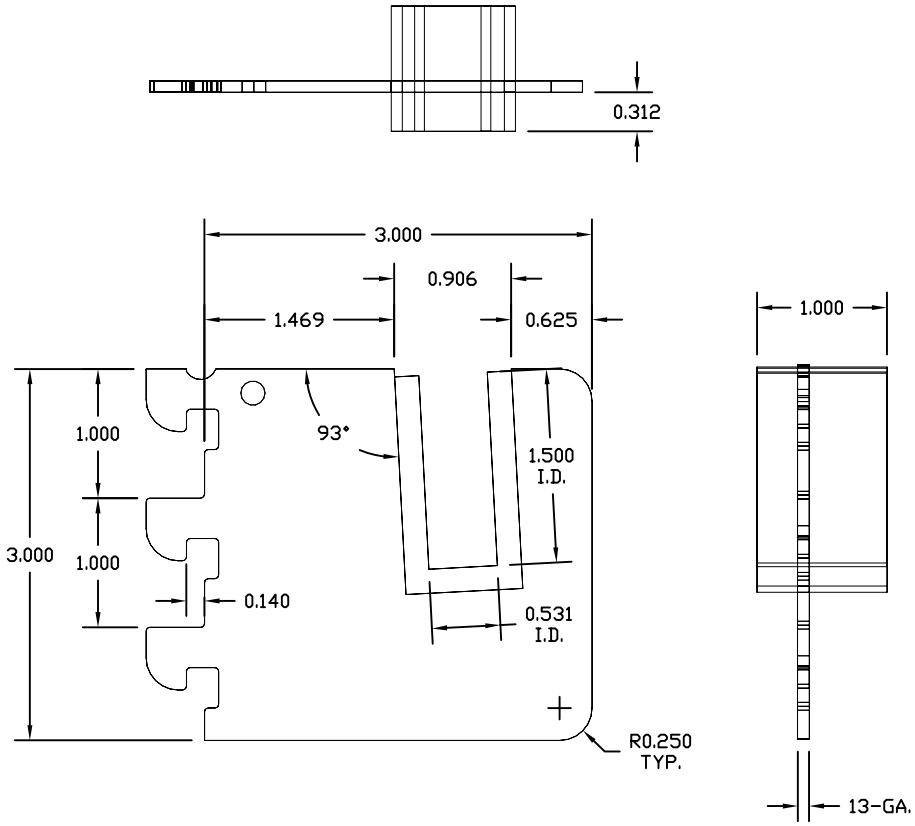

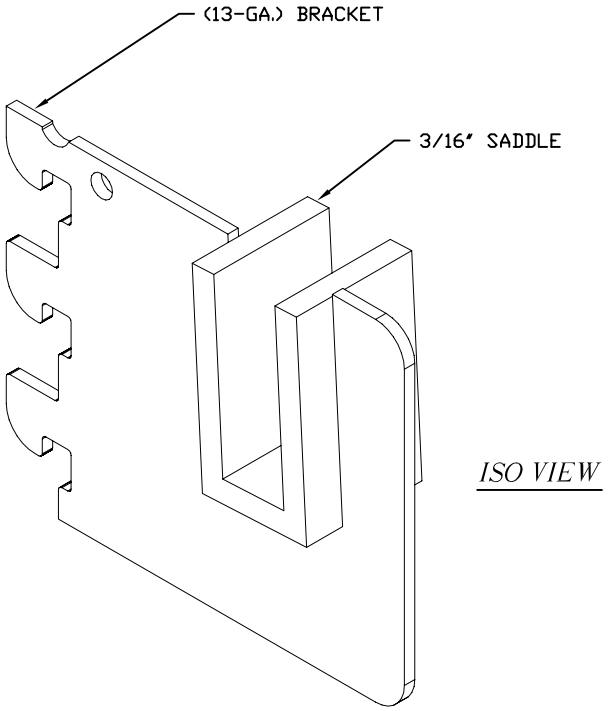

REVISIONS

REV.	DESCRIPTION	E.C.O. NO.	DATE	APPROVED
XX	XX	XX	XX	

THIS DRAWING IS THE EXCLUSIVE PROPERTY OF REEVE STORE EQUIPMENT CO. WHO HOLDS AND MAINTAINS FULL COPYRIGHT PROTECTION UNDER FEDERAL AND STATE LAW. THIS DRAWING CANNOT BE DUPLICATED, PHOTOCOPIED, DIGITALLY TRANSFERRED, OR REPRODUCED WITHOUT THE EXPRESS WRITTEN CONSENT OF REEVE STORE EQUIPMENT CO. COPYRIGHT © 2007, 2006, 2005, 2004,2003. ALL RIGHTS RESERVED.

UNLESS OTHERWISE SPECIFIED DIMENSIONS ARE IN INCHES TOLERANCES ARE:

FRACTIONS:	DECIMALS:	ANGLES:
± 1/32	.XX ±.01 .XXX ±.005	± 1/2°

FINISH: SATIN NICKEL W/CLEAR COAT

DO NOT SCALE DRAWING

CUSTOMER: –

APPROVALS		DATE
DRAWN	J. AVILA	04-04-08
CHK'D.		
APVD.		

EQCB NO. –

REEVE STORE EQUIPMENT CO.
Pico Rivera, CA. (562) 949-2535

TITLE: CROSSBAR BRACKET (LEFT)

SIZE: B | DWG. NO. I-NS0230 | REV.

SCALE: N.T.S. | SHEET: 1 OF 1